Norfolk Aero DC Smart Series Installation Guide

Thanks for choosing our Norfolk Aero DC Smart Series ceiling fan.
We strongly recommend that you read this manual carefully before installation.

6 YEAR Warranty

Models Parameters (Fan Only):

MNDC183WN	1765mm 3 Blade DC WiFi Ceiling Fan Matt White/Natural
MNDC183WW	1765mm 3 Blade DC WiFi Ceiling Fan Matt White/ Whitewash
MNDC183MW	1765mm 3 Blade DC WiFi Ceiling Fan Matt Black/ Walnut
MNDC223WN	2175mm 3 Blade DC WiFi Ceiling Fan Matt White/Natural
MNDC223WW	2175mm 3 Blade DC WiFi Ceiling Fan Matt White/ Whitewash
MNDC223MW	2175mm 3 Blade DC WiFi Ceiling Fan Matt Black/ Walnut

Part List:

Qty 1x Motor assembly
Qty 1x Mounting bracket
Qty 1x Downrod
Qty 1x Instruction manual
Qty 1x Remote & Receiver
Qty 1x Canopy
Qty 1x Screw kit
Qty 3x Blades
Qty 1x Bottom plate
Qty 1x Coupling cover
Qty 1x Decorative ring
Qty 1x Blade fixing metal plate

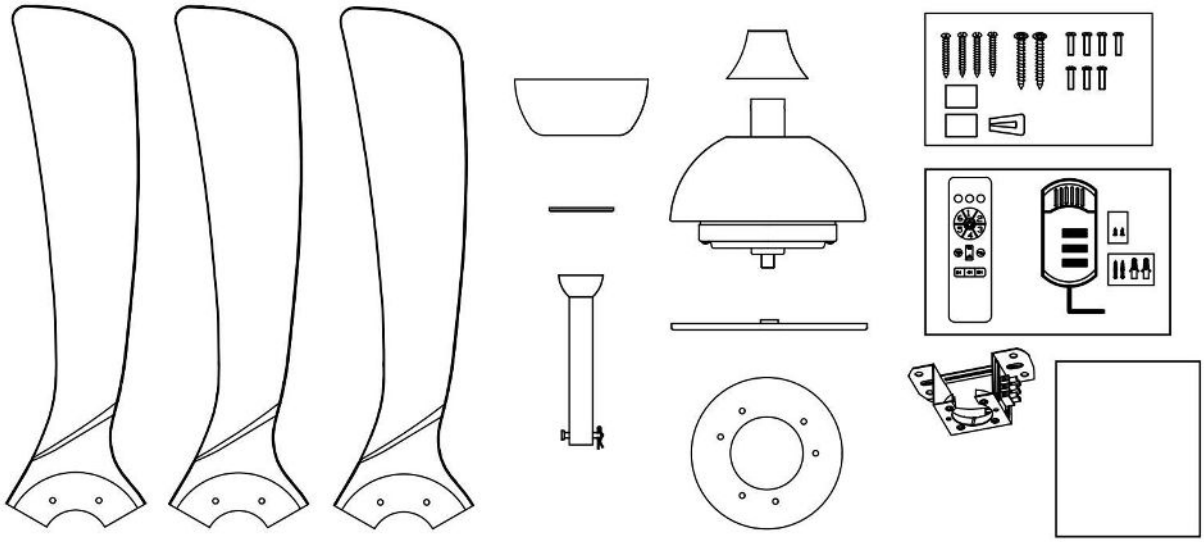

Application

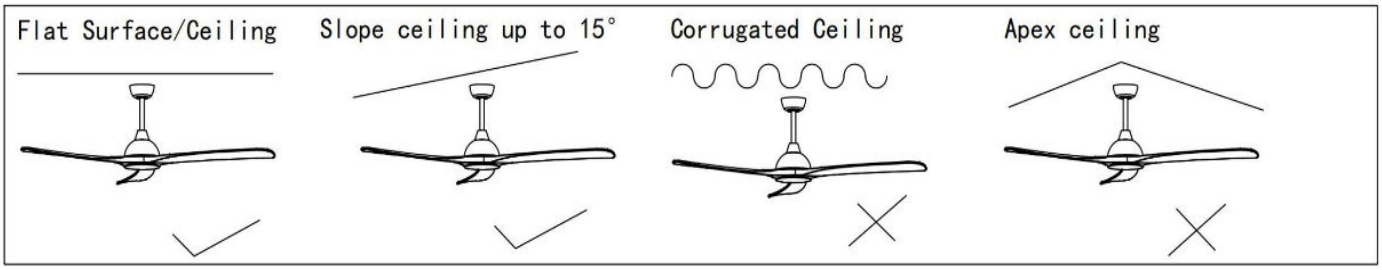

E: sales@martecltd.com.au | P: 02 8778 7500
www.martecaustralia.com.au

MARTEC Cooling

WARNING Installation MUST carry out by a qualified and licensed electrician.

IMPORTANT SAFEGUARDS:

Means for disconnection must be incorporated in the fixed wiring in accordance with the wiring rules.

The replacement of parts of the safety suspension system device shall be performed by the manufacturer, its service agent or suitably qualified persons.

The light source contained in this luminaire shall only be replaced by the manufacturer or his service agent or a similar qualified person.

This appliance is not intended for use by persons (including children) with reduced physical, sensory or mental capabilities, or lack of experience and knowledge, unless they have been given supervision or instruction concerning use of the appliance by a person responsible for their safety.

Children should be supervised to ensure that they do not play with the appliance.

- the fixing means for attachment to the ceiling such as hooks or other devices shall be fixed with a sufficient strength to withstand 4 times the weight of the ceiling fan;

- that the mounting of the suspension system shall be performed by the manufacturer, its service agent or suitably qualified persons;

- that the fan is to be installed so that the blades are more than 2,1m above the floor.

WARNING: If unusual oscillating movement is observed, immediately stop using the ceiling fan and contact the manufacturer, its service agent or suitably qualified persons.

How to Assemble

Fg.1

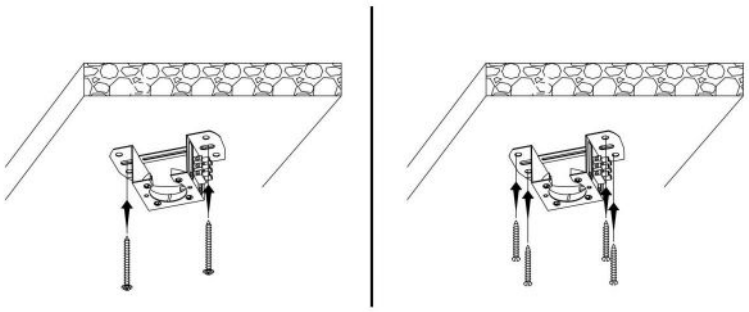

Secure the bracket to the ceiling by using screws provided.
Ensure screws are tightened on the bracket.

Fg.2

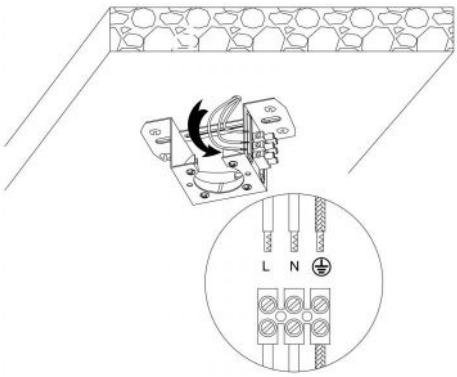

Wire to main as illustrated.

WARNING Installation MUST carry out by a qualified and licensed electrician.

How to Install Blades

Fg.3

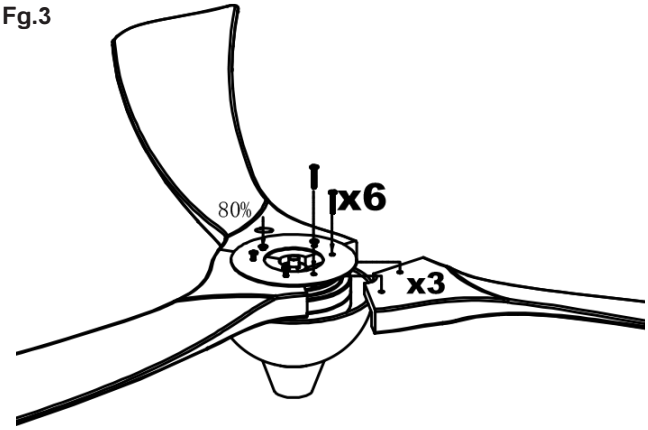

Install the blades and blade fixing metal plate to the motor with screws provided, first tightening the screws by 80%, Repeat this procedure until all the blades are installed, and then tighten the screws fully.

NB: Ensure the blades do not get damaged or bent during the installation process while the fan maybe on the ground, this will affect the performance and balance of the fan and this is NOT covered under warranty.

How to Install

Fg.4

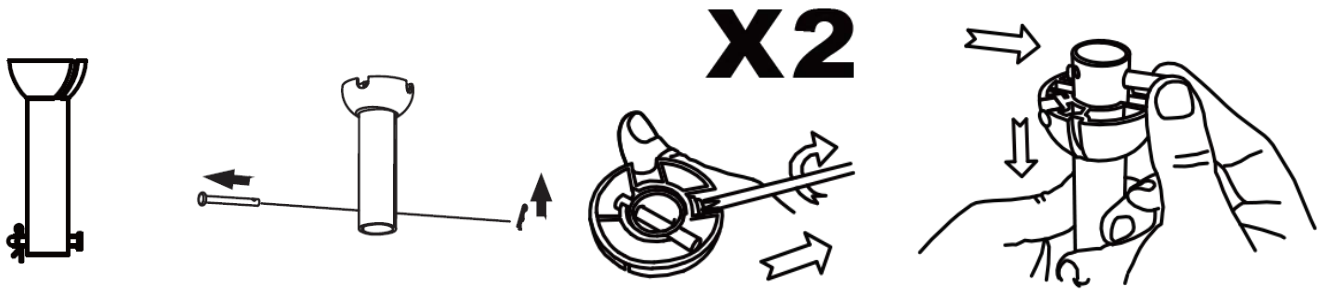

Remove cotter-pin and cross-pin from the bottom of the downrod.
At the top of the downrod loosen the two set screws and remove ball pin.
NB: Ensure all pieces are carefully put aside.

How to Install

Fg.5

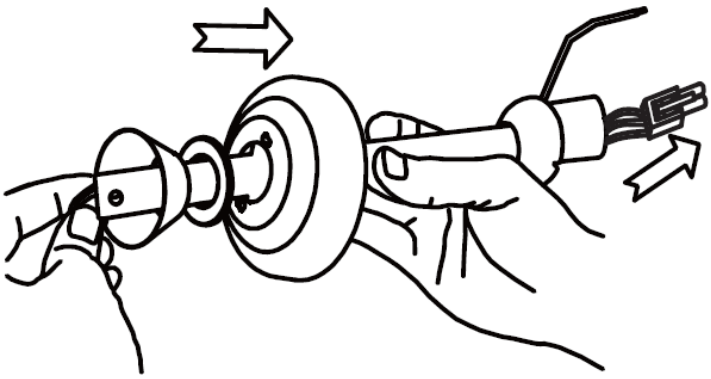

Assemble rest parts of the fan as illustrated.
Feed the main motor wire plug up through the inside of the downrod.

WARNING Installation MUST carry out by a qualified and licensed electrician.

How to Install

Fg.6

Fg.7

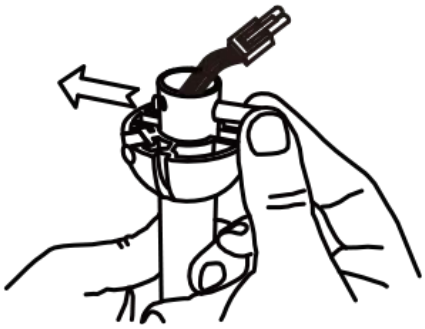

Fg.8

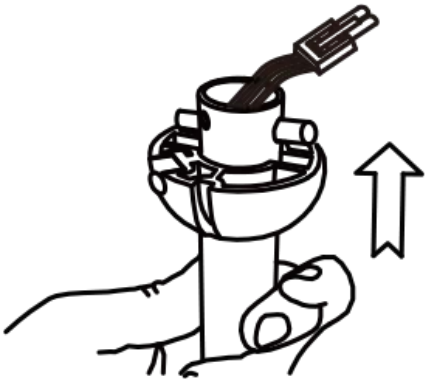

Fg.9

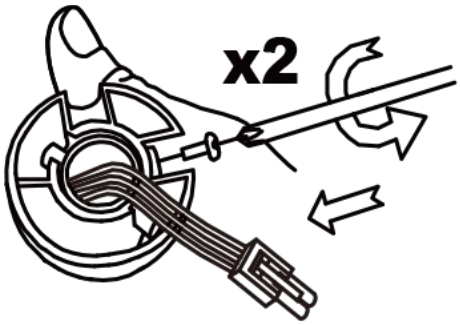

Install the hanging ball with the little pole and two screws as illustrated.

How to Install

Fg.10

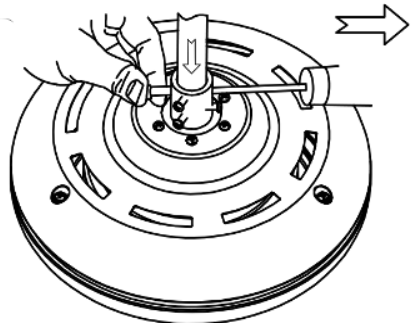

Fg.11

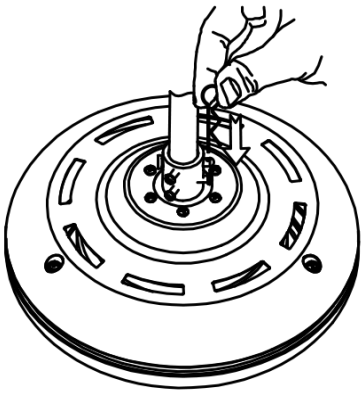

Fg.12

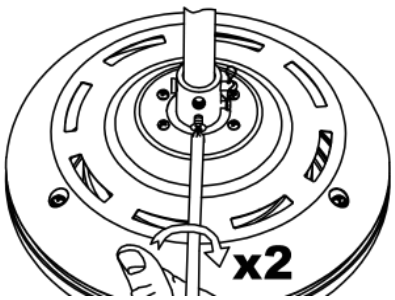

Gently push the cross-pin through the holes aligned with the base of the downrod holder and downrod.
Insert cotter pin into cross pin and secure downrod with two set screws.
NB: DO NOT force the cross-pin. Gently wiggle and rotate it until it glides through both holes.

WARNING Installation MUST carry out by a qualified and licensed electrician.

How to Install

Fg.13

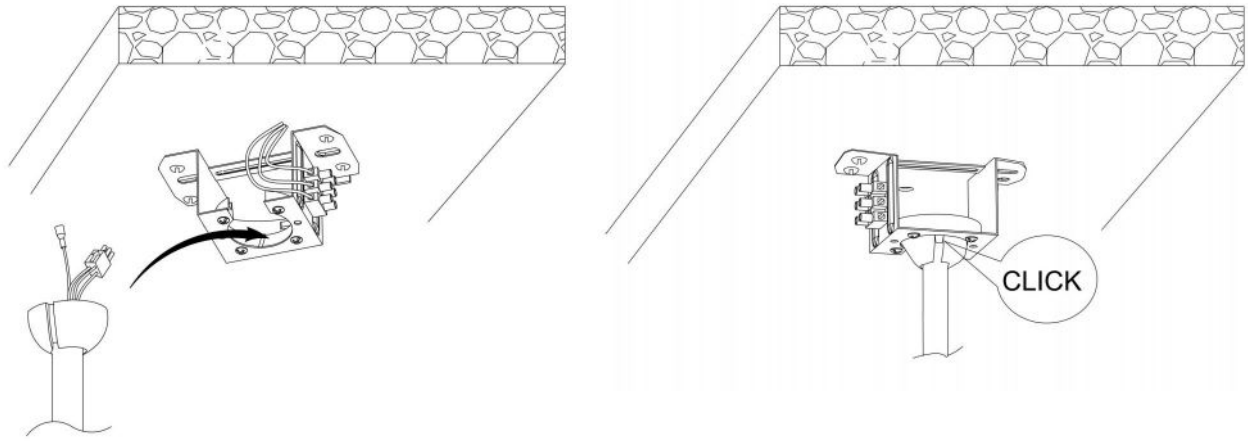

Place fan into mounting bracket and align ball joint slot with mounting bracket as illustrated.

How to Install

Fg.14

Fan Only Model

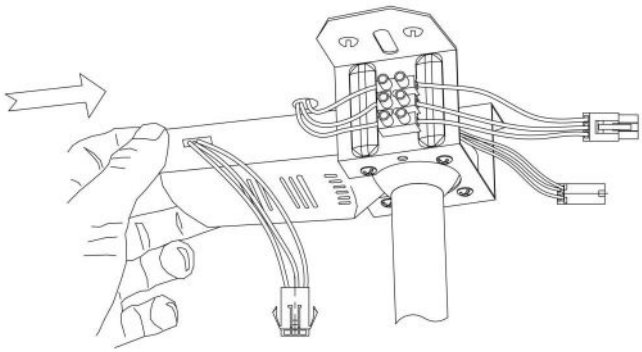

Carefully insert and install the receiver into the mounting bracket.

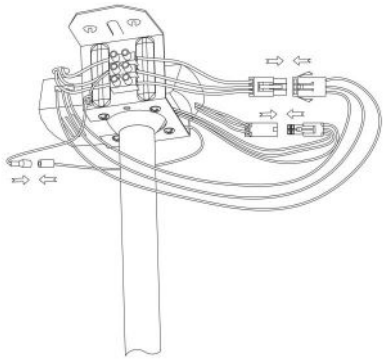

Connect all connectors as illustrated.

Wire up the receiver with quick connectors and insert into the mounting bracket. Make sure the antenna wire has been safely folded inside the canopy cover before final assembly. (DO NOT cut the antenna wire)

Important Reminders

Receiver must be correctly installed in the mounting bracket
When the transmitter cannot control the receiver, please check

i) has sufficient battery in the transmitter

ii) any existence of similar remote controlled products nearby that cause interference

Replace battery if getting low as this will affect sensitivity of the transmitter
Take the battery out from the transmitter when leaving used for a long time to avoid battery leaks
Isolation switch MUST be connected in the line

WARNING Installation MUST carry out by a qualified and licensed electrician.

How to Install

Fg.15

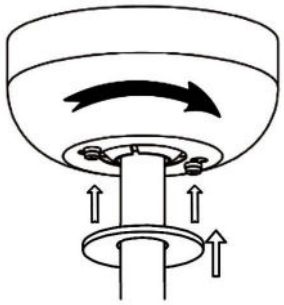

After wiring is completed attach the canopy to the mounting bracket by pushing upwards and twisting anti-clockwise. Tighten screws and ensure canopy is not touching the ball joint. And then attach the decorative ring to the canopy as illustrated.

How to Install

Fg.16

Fan Only Model

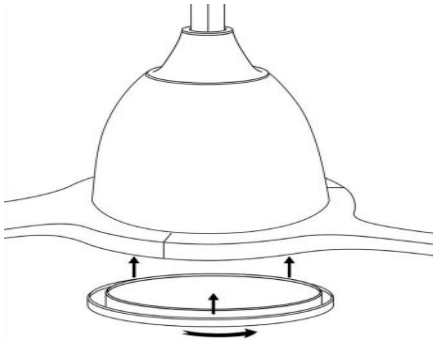

Twist bottom plate on to motor shaft thread.

WOBBLE:

- Ceiling fans are designed to move during operation because they are not generally rigidly mounted
- Movement of a couple of centimetres is acceptable for safe operation.
- Balancing kits included should be used to adjust the balancing when first installed.

Complete

The installation is finished.

WARNING Installation MUST carry out by a qualified and licensed electrician.

Wire Connections

Fan Only Model

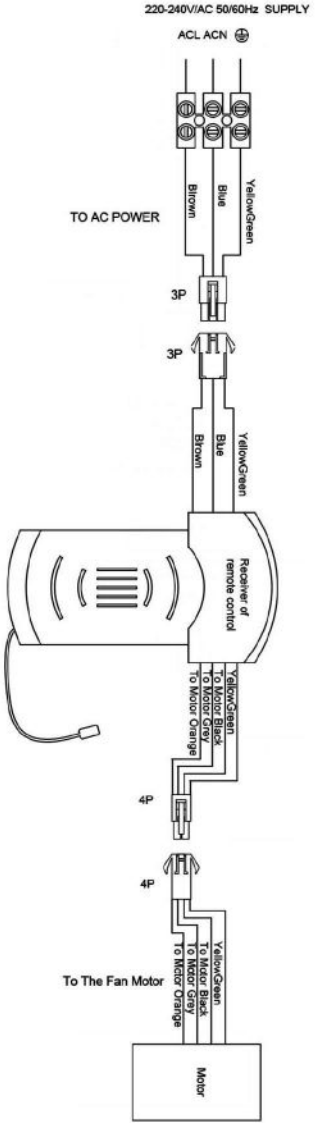

6* Year Warranty

Visit our website for details
https://www.martecaustralia.com.au/wp-content/uploads/2023/05/Warranty-Statement_Cooling.pdf

WARNING

- Installation of fans **MUST** follow SAA standards and meet local authority regulations.
- Installation **MUST** be carried out by a qualified and licensed electrician.
- Fan and light **MUST** be earthed.
- Bracket **MUST** be firmly attached to a flat solid structure or timber frame.
- **DO NOT** mix blades from one model to another, all blades MUST be replaced if damaged.
- The warranty is **VOID** if product is not installed according to this installation guide.

WARNING Installation MUST carry out by a qualified and licensed electrician.

Smart Life matching process, please follow the steps:

1.Download the "Smart Life" APP on your smart devices by scanning the QR code below with camera.

2.Turn on WiFi and Bluetooth on your smart devices. Ensure it's connected to a 2.4GHZ WiFi.

3.Open the APP, follow the steps to register new user account or login existing account.

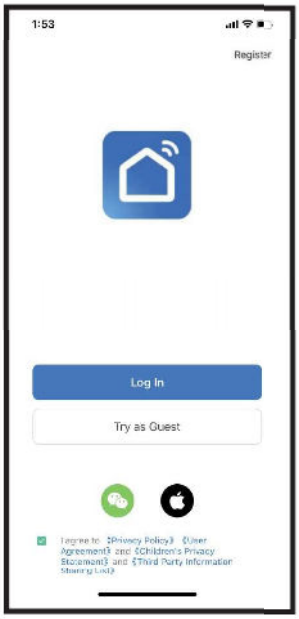

4.Follow instructions in main manual (steps can also be found on the back of the remote) to put the fan into WiFi pairing mode. If the operation is successful, go to step 6. If the fan has previously been paired or you can't get it to work, please go to step 5 to RESET the fan.

5.RESET the fan. This step is NOT necessary if the fan has successfully entered WiFi pairing mode in the last step, if not, try to RESET the fan: turn on the fan, power off after 10 seconds, power on again after 15 seconds, long press "Fan Stop" for 5 seconds, if "beep beep" are heard, the reset is successful. If "beep beep" is not heard, the reset is failed, please repeat this step.

6.Once the fan has entered WiFi pairing mode, open the APP again on the smart device. Click "Add Device" in the middle or the "+" on the top right of the screen.

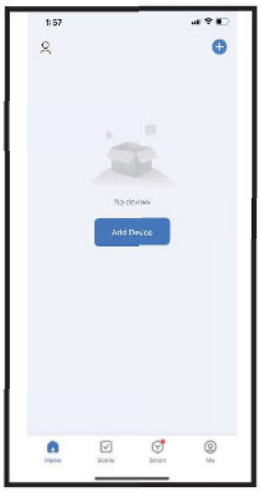

7.The auto scan should begin automatically, and the fan should show up at the top of screen within a few seconds.

Note: If the fan is not showing up, you can add it manually by clicking and navigate to: >Add Manually >Small Home Appliance > Fan

8.Follow instructions in the APP to finish the set up.

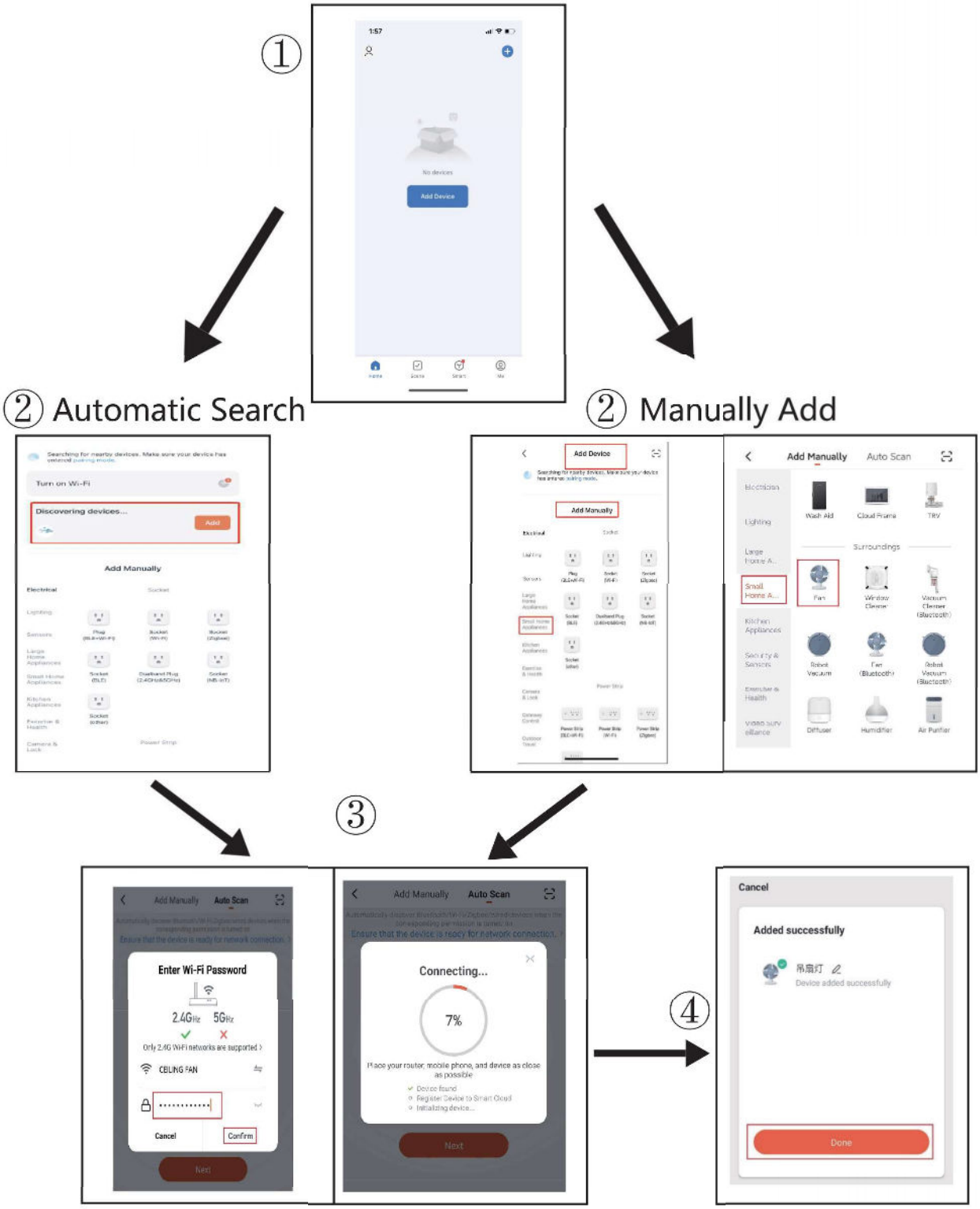

WARNING Installation MUST carry out by a qualified and licensed electrician.

WiFi / Remote Control Pairing

Fan only model

Pairing the remote control

1. Turn on the ceiling fan.
2. Within the first 20 seconds, continue pressing the ⏻ button until you hear a "beep" sound. ie. It is paired.

If you don't hear a "beep" sound, repeat step 1 and step 2 again.

Entering WiFi Pairing mode:

1.Turn on the power.
2.Within the first 20 seconds, press and hold the " 📶 " button until a "beep" is heard.
3.Continue step connect on your smart devices to complete the pairing.

If you don't hear a "beep" sound, repeat the above steps.

FAN OFF ⏻ : to switch off the fan.

SLEEP MODE 🛏: Turn on the fan at an extra lower speed to create a general breeze.

SPEED BUTTON: 1 = lowest speed. 6 = highest speed.

NATURAL WIND MODE ≋ : designed for the elderly and children. 1-6 speed changes randomly to feel the breeze.

FORWORD AND REVERSAL ⟲ : summer/winter reverse mode.

TIMER 1H/4H/8H: preset timer for fan and light to stop automatically. ie. if timer set at 1H and then press 4H, fan will stop at 4H. Setting default to last press.

WIFI BUTTON 📶 :Follow the instructions and press and hold for 20 seconds to enter wifi matching mode.

Fan LED Light Model

Pairing the remote control

1. Turn on the ceiling fan.
2. Within the first 20 seconds, continue pressing the ⏻ button until you hear a "beep" sound. ie. It is paired.

If you don't hear a "beep" sound, repeat step 1 and step 2 again

Entering WiFi Pairing mode:

1.Turn on the power.
2.Within the first 20 seconds, press and hold the " 💡 " button until a 'beep" is heard.
3.Continue step connect on your smart devices to complete the pairing.

If you don't hear a "beep" sound, repeat the above steps.

FAN OFF ⏻ : to switch off the fan.

SLEEP MODE 🛏: Turn on the fan at an extra lower speed to create a general breeze.

SPEED BUTTON: 1 = lowest speed. 6 = highest speed.

NATURAL WIND MODE ≋ : designed for the elderly and children. 1-6 speed changes randomly to feel the breeze.

FORWORD AND REVERSAL ⟲ : summer/winter reverse mode.

TIMER 1H/4H/8H: preset timer for fan and light to stop automatically. ie. if timer set at 1H and then press 4H, fan will stop at 4H. Setting default to last press.

LIGHT ON/OFF 💡 : to switch off the light.

CCT : warm white (2700K) / natural white (4000K) / cool white (6500K)

LED- LED+ : minus "-" = reduces brightness
plus "+"= increases brightness

6* Year Warranty
Visit our website for details
https://www.martecaustralia.com.au/wp-content/uploads/2023/05/Warranty-Statement_Cooling.pdf

CE RoHS

WARNING

- Installation of fans MUST follow SAA standards and meet local authority regulations.
- Installation MUST be carried out by a qualified and licensed electrician.
- Fan and light MUST be earthed.
- Bracket MUST be firmly attached to a flat solid structure or timber frame.
- DO NOT mix blades from one model to another, all blades MUST be replaced if damaged.
- The warranty is VOID if product is not installed according to this installation guide.